ARCHITECTURAL FX

Technicians of Light

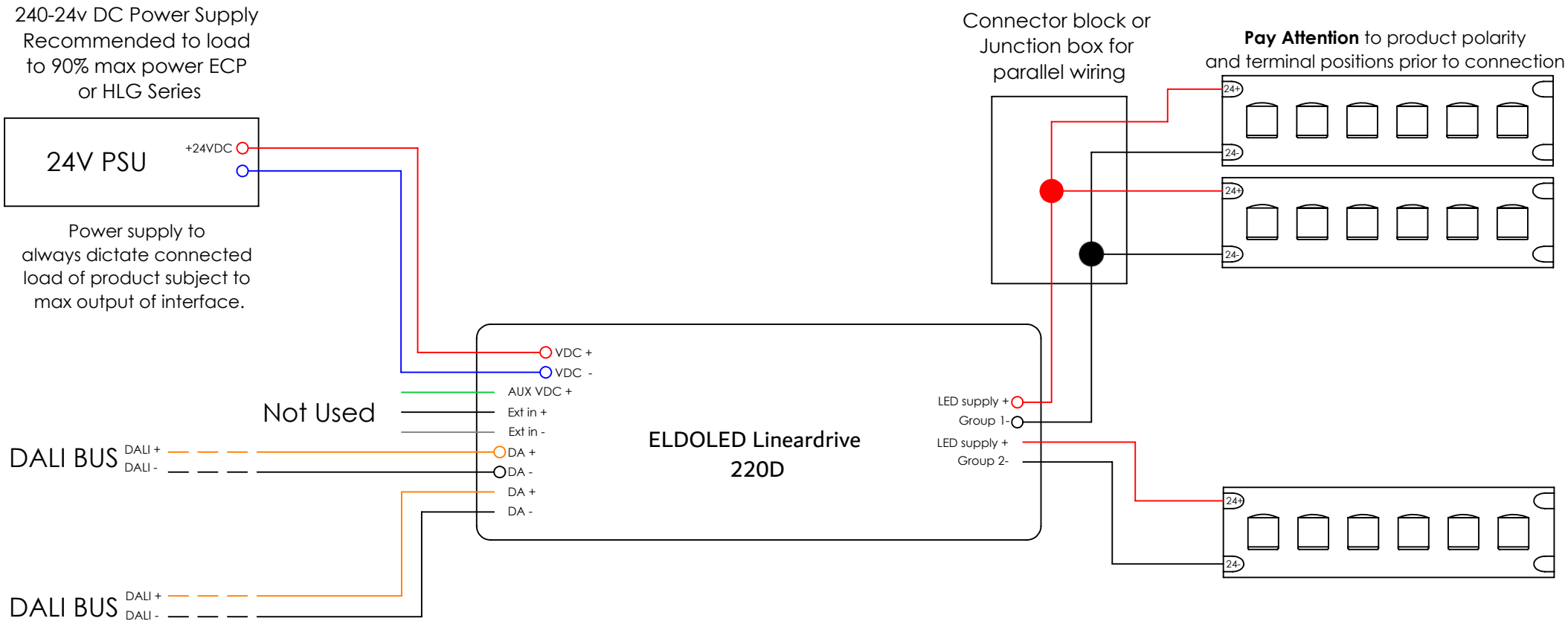

IF ANYTHING ON THIS DRAWING IS NOT CLEAR, PLEASE CONTACT ARCHITECTURAL FX

Architectural FX Unit 16, The Business Centre, Molly Millars Lane, Wokingham, RG41 2QY
T +44 (0) 1344291536
E sales@architecturalfx.co.uk
W www.architecturalfx.co.uk